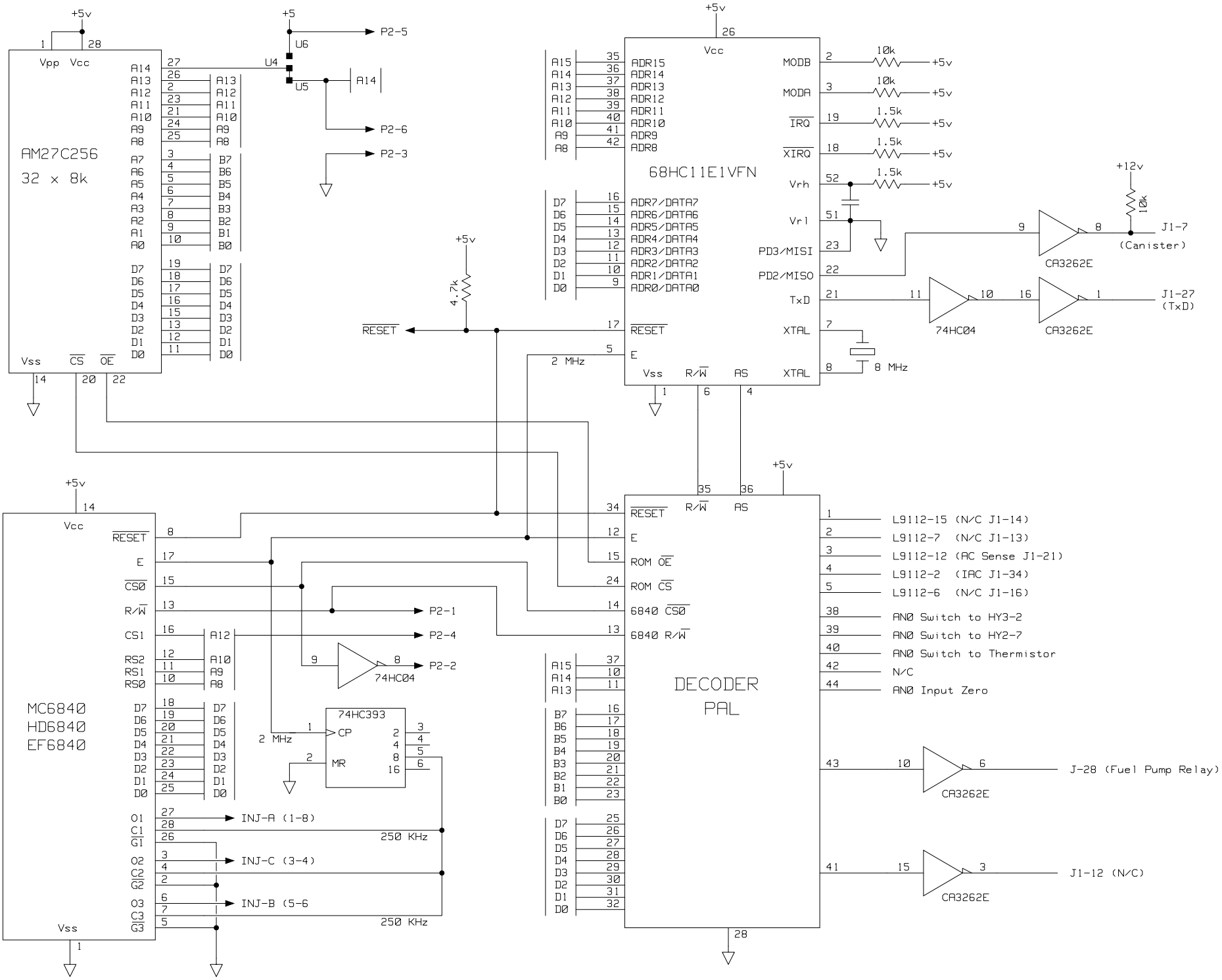
AM27C256
32 x 8k
Vpp Vcc
Vss CS OE
+5v
+5
U4
U5
U6
A14
P2-5
P2-6
P2-3
68HC11E1VFN
Vcc
ADR15
ADR14
ADR13
ADR12
ADR11
ADR10
ADR9
ADR8
ADR7/DATA7
ADR6/DATA6
ADR5/DATA5
ADR4/DATA4
ADR3/DATA3
ADR2/DATA2
ADR1/DATA1
ADR0/DATA0
MODB
MODA
IRQ
XIRQ
Vrh
Vrl
PD3/MISI
PD2/MISO
TxD
XTAL
RESET
E
Vss R/W AS
10k
1.5k
+12v
J1-7
(Canister)
CA3262E
74HC04
J1-27
(TxD)
8 MHz
2 MHz
4.7k
MC6840
HD6840
EF6840
Vcc
Vss
RESET
E
CS0
R/W
CS1
RS2
RS1
RS0
O1
C1
G1
O2
C2
G2
O3
C3
G3
P2-1
P2-4
P2-2
74HC393
CP
MR
INJ-A (1-8)
INJ-C (3-4)
INJ-B (5-6
250 KHz
DECODER
PAL
ROM OE
ROM CS
6840 CS0
6840 R/W
L9112-15 (N/C J1-14)
L9112-7 (N/C J1-13)
L9112-12 (AC Sense J1-21)
L9112-2 (IAC J1-34)
L9112-6 (N/C J1-16)
AN0 Switch to HY3-2
AN0 Switch to HY2-7
AN0 Switch to Thermistor
N/C
AN0 Input Zero
J-28 (Fuel Pump Relay)
J1-12 (N/C)