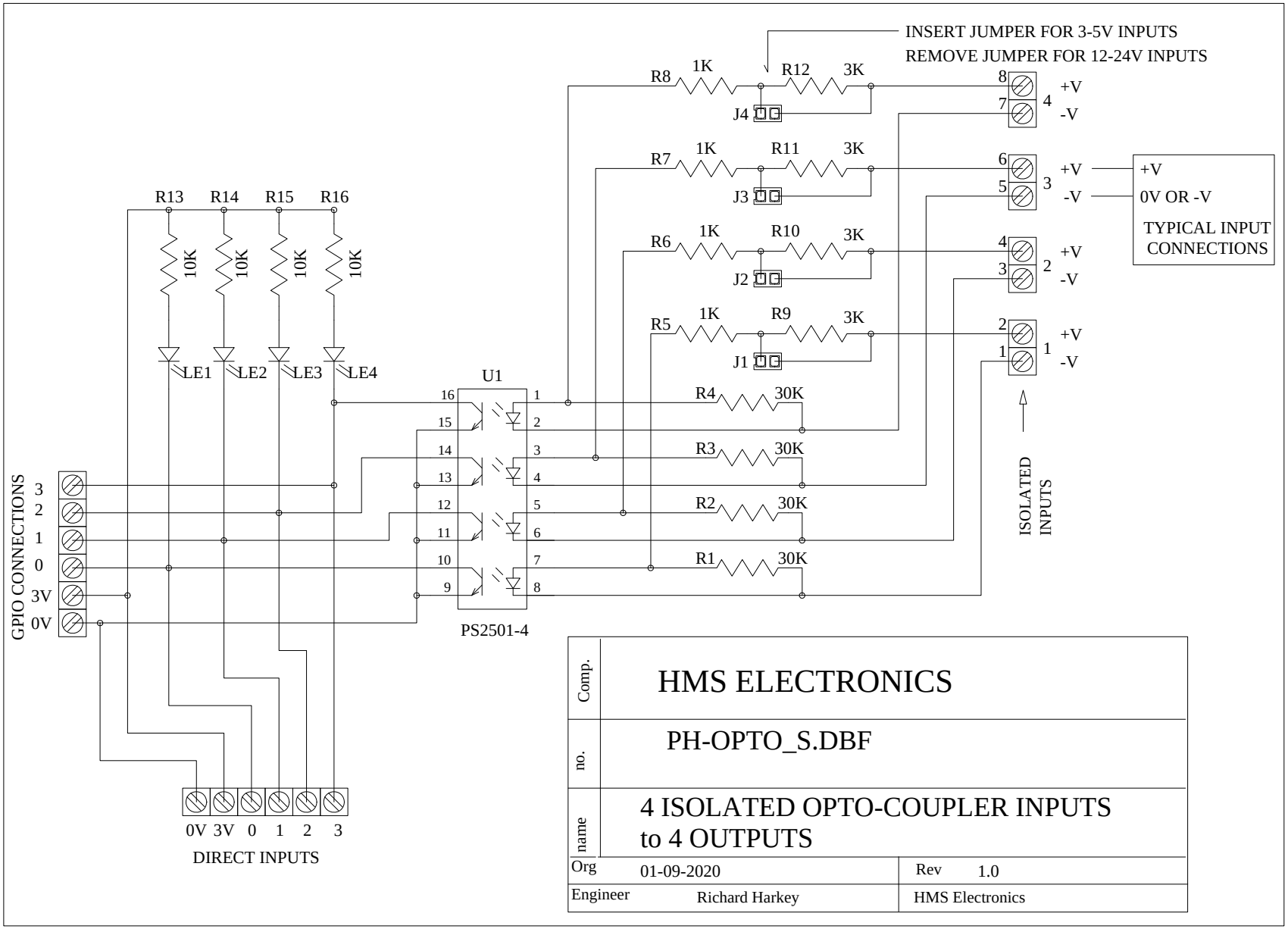


| | |
|---|---|
| Comp. | HMS ELECTRONICS |
| no. | PH-OPTO_S.DBF |
| name | 4 ISOLATED OPTO-COUPLER INPUTS to 4 OUTPUTS |
| Org 01-09-2020 | Rev 1.0 |
| Engineer Richard Harkey | HMS Electronics |