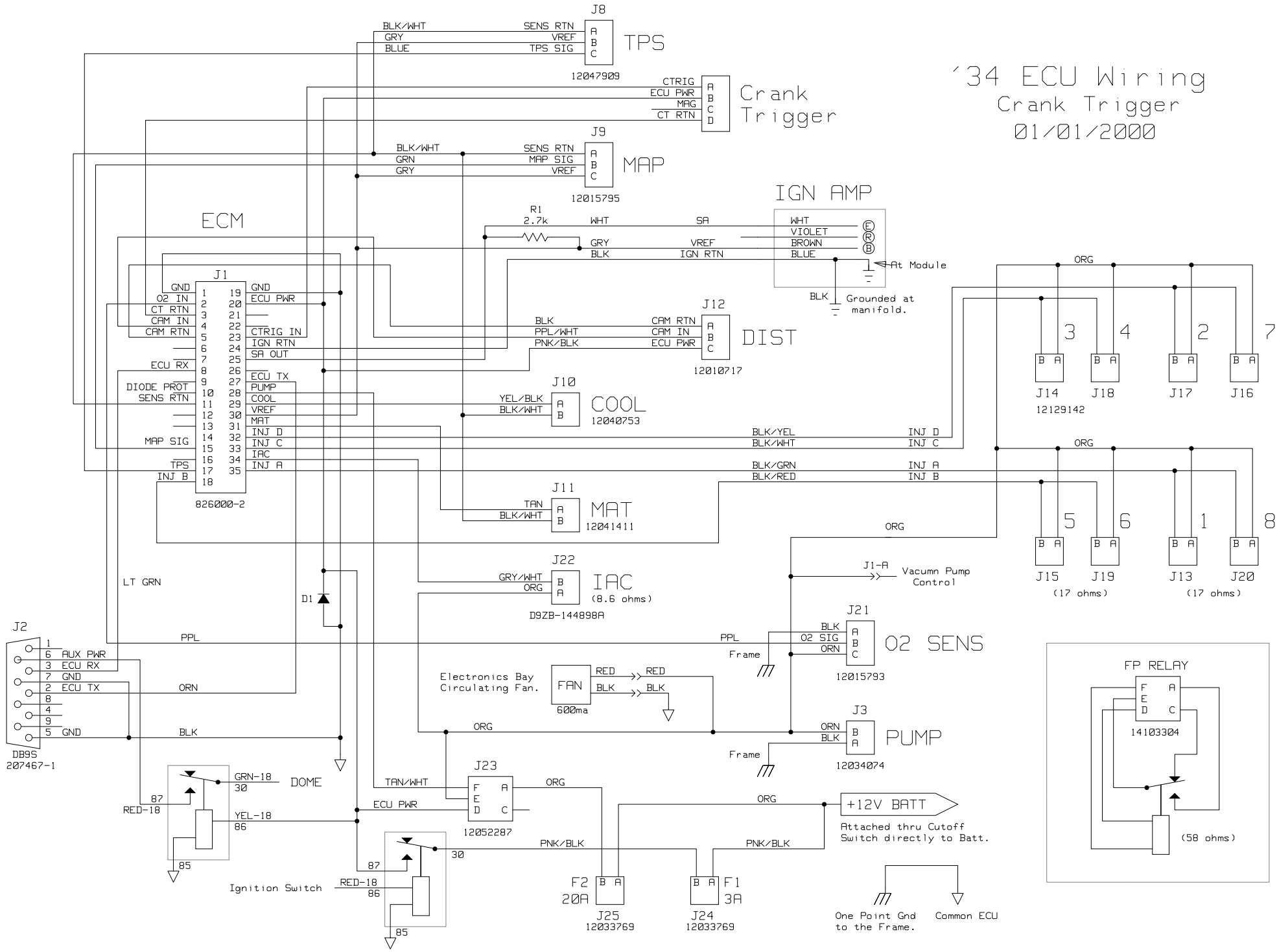
'34 ECU Wiring
Crank Trigger
01/01/2000
J8
TPS
12047909
BLK/WHT SENS RTN
GRY VREF
BLUE TPS SIG
Crank Trigger
CTRIG
ECU PWR
MAG
CT RTN
J9
MAP
12015795
BLK/WHT SENS RTN
GRN MAP SIG
GRY VREF
ECM
J1
826000-2
GND
O2 IN
CT RTN
CAM IN
CAM RTN
ECU RX
DIODE PROT
SENS RTN
MAP SIG
TPS
INJ B
CTRIG IN
IGN RTN
SA OUT
ECU TX
PUMP
COOL
VREF
MAT
INJ D
INJ C
IAC
INJ A
IGN AMP
R1
2.7k
WHT SA
GRY VREF
BLK IGN RTN
WHT
VIOLET
BROWN
BLUE
At Module
BLK Grounded at manifold.
J12
DIST
12010717
BLK CAM RTN
PPL/WHT CAM IN
PNK/BLK ECU PWR
J10
COOL
12040753
YEL/BLK
BLK/WHT
J11
MAT
12041411
TAN
BLK/WHT
J22
IAC
(8.6 ohms)
D9ZB-144898A
GRY/WHT
ORG
LT GRN
D1
BLK/YEL INJ D
BLK/WHT INJ C
BLK/GRN INJ A
BLK/RED INJ B
ORG
J14 J18 J17 J16
12129142
J15 J19 J13 J20
(17 ohms)
(17 ohms)
J1-A
Vacumn Pump Control
J21
O2 SENS
12015793
BLK
O2 SIG
ORN
Frame
PPL
J2
DB9S
207467-1
AUX PWR
ECU RX
GND
ECU TX
GND
ORN
BLK
Electronics Bay Circulating Fan.
FAN
600ma
RED
BLK
J3
PUMP
12034074
ORN
BLK
Frame
ORG
FP RELAY
14103304
(58 ohms)
DOME
GRN-18
30
87
RED-18
YEL-18
86
85
TAN/WHT
ECU PWR
J23
12052287
ORG
+12V BATT
Attached thru Cutoff Switch directly to Batt.
PNK/BLK
Ignition Switch
RED-18
F2
20A
J25
12033769
F1
3A
J24
12033769
One Point Gnd to the Frame.
Common ECU